Ω
Ω
Ω
Ω
Ω
Ω
Ω
Ω
Ω
Ω
Ω
Ω

Ω

Ω

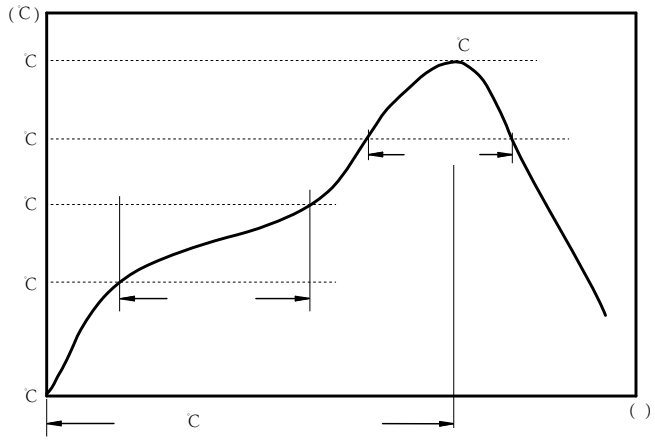

C

C

C

:

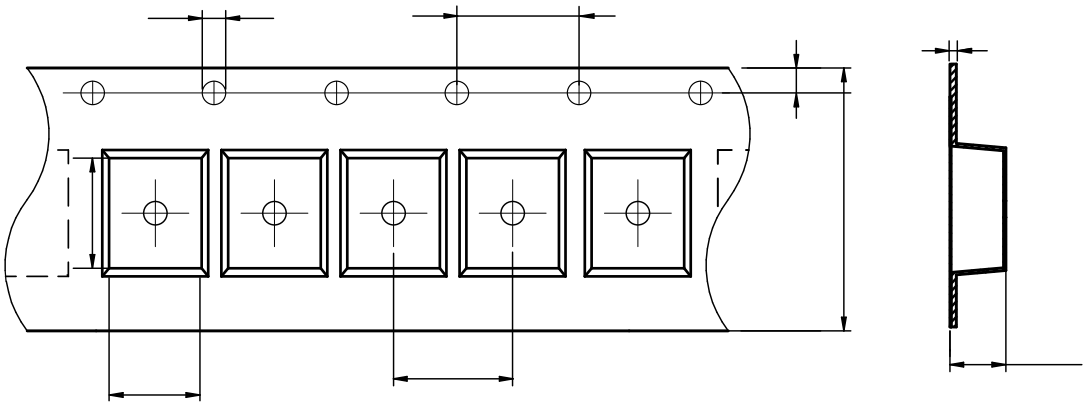

FBHA0603	0.96 ± 0.05	1.80 ± 0.05	1.5 ± 0.1	4.0 ± 0.1	4.0 ± 0.1	8.0 ± 0.3	0.95 ± 0.05	1.75 ± 0.1	0.95 ± 0.05

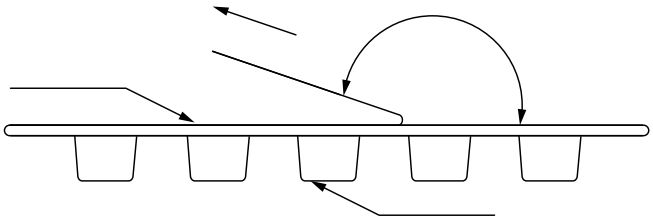

The peel force of top cover tape shall be between 0.14 to 0.58 N

:

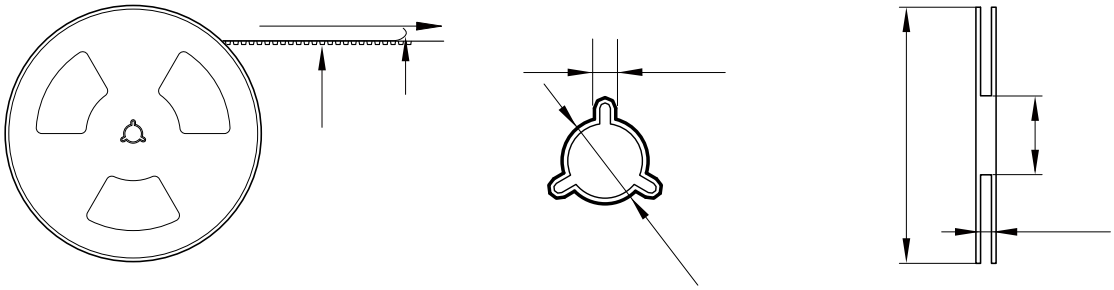

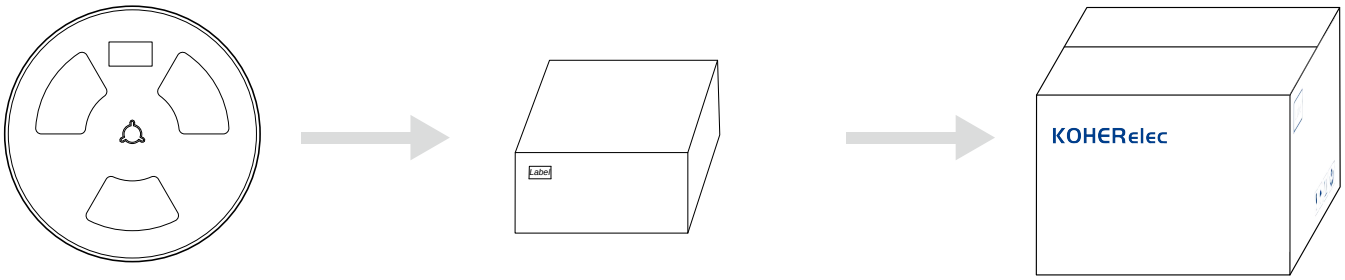

4000 Pcs/Reel

5 Reel /Inner box(20K Pcs)

8 Inner box/Carton box(160K Pcs)

:

-
-
-
-
-
-
-